PRIVATE

SWIMMING POOLS

PROPERTY OWNER AGREEMENT

Building Development Services

City of Springfield

IRC2012

Several regulations regarding private swimming pools are covered in the International Residential Building Code. Most pertain to barriers or enclosures intended to keep children from gaining access to the pool unsupervised, thus reducing the potential for accidental drowning. This summary of those regulations is intended to help clarify the intent of the standards. The entire code text is included. If further help is needed in interpreting some part of the regulations, please contact the Building Development Services Department at 417-864-1059.

SWIMMING POOLS, SPAS AND HOT TUBS

AG105.1 Application. These provisions shall control the design of barriers for residential swimming pools, spas and hot tubs. These design controls are intended to provide protection against potential drowning and near drowning by restricting access to swimming pools, spas and hot tubs.

AG105.2 Outdoor swimming pool. An outdoor swimming pool, including an in ground, above ground or on ground pool, hot tub or spa shall be surrounded by a barrier which shall comply with the following:

1. The top of the barrier shall be at least 48 inches (1219mm) above grade measured on the side of the barrier, which faces away from the swimming pool. The maximum vertical clearance between grade and the bottom of the barrier shall be 2 inches (51mm) measured on the side of the barrier which faces away from the swimming pool. Where the top of the pool structure is above grade, such as an above ground pool, the barrier may be at ground level, such as the pool structure, or mounted on the top of the pool structure. Where the barrier is mounted on the top of the pool structure, the maximum vertical clearance between the top of the pool structure and the bottom of the barrier shall be 4 inches (102mm).
2. Openings in the barrier shall not allow passage of a 4 inch diameter (102mm) sphere.
3. Solid barriers, which do not have openings, such as a masonry or stone wall, shall not contain indentations or protrusions except for normal construction tolerances and tooled masonry joints.
4. Where the barrier is composed of horizontal and vertical members and the distance between the tops of the horizontal members is less than 45 inches (1143mm), the horizontal members shall be located on the swimming pool side of the fence. Spacing between vertical members shall not exceed 1 ¾ inches (44mm) in width. Where there are decorative cutouts within vertical members, spacing within the cutouts shall not exceed 1 ¾ inches (44mm) in width.
5. Where the barrier is composed of horizontal and vertical members and the distance between the tops of the horizontal members is 45 inches (1143mm) or more, spacing between vertical members shall not exceed 4 inches (102mm). Where there are decorative cutouts within vertical members, spacing within the cutouts shall not exceed 1 ¾ inches (44mm) in width.
6. Maximum mesh size for chain link fences shall be a 2 ¼ inch (57mm) square unless the fence has slats fastened at the top of the bottom which reduce the openings to not more than 1 ¾ inches (44mm).

7. Where the barrier is composed of diagonal members, such as a lattice fence, the maximum opening formed by the diagonal members shall not be more than 1 ¾ inches (44mm)

8. Access gates shall comply with the requirements of Section B, Items 1 through 7, and shall be equipped to accommodate a locking device. Pedestrian access gates shall open outward away from the pool and shall be self-closing and have a self-latching device. Gates other than pedestrian access gates shall have a self-latching device. Where the release mechanism of the self-latching device is located less than 54 inches (1372mm) from the bottom of the gate, the release mechanism and openings shall comply with the following:

8.1 The release mechanism shall be located on the pool side of the gate at least 3 inches (76mm) below the top of the gate; and

8.2 The gate and barrier shall have no opening larger than ½ inches (13mm) within 18 inches (457mm) of the release mechanism.

9. Where a wall of a dwelling serves as part of the barrier, one of the following conditions shall be met:

9.1 The pool shall be equipped with a powered safety cover in compliance with ASTMF 1346; or

9.2 Doors with direct access to the pool through that wall shall be equipped with an alarm, which produces and audible warning when the door and/or its screen, if present, are opened. The alarm shall be listed in accordance with UL 2017. The audible alarm shall activate within 7 seconds and sound continuously for a minimum of 30 seconds after the door and/or its screen, if present, are opened and be capable of being heard throughout the house during normal household activities. The alarm shall automatically reset under all conditions. The alarm system shall be equipped with a manual means, such as a touch pad or switch, to temporarily deactivate the alarm for a single opening. Deactivation switch(es) shall be located at least 54 inches (1372mm) above the threshold of the door; or

9.3 Other means of protection, such as self-closing doors with self-latching devices, which are approved by the governing body, shall be acceptable so long as the degree of protection afforded is not less than the protection afforded by Item 9.1 or 9.2 described above.

10. Where an above ground pool structure is used as a barrier or where the barrier is mounted on top of the pool structure, the means of access is a ladder or steps:

10.1 The ladder or steps shall be capable of being secured, locked or removed to prevent access;

10.2 The ladder or steps shall be surrounded by a barrier which meets the requirements of Paragraph B above, Items 1 through 9. When the ladder or steps are secured, locked or Removed, any opening created shall not allow the passage of a 4 inch diameter (102mm) sphere.

AG105.3 Indoor swimming pool. Walls surrounding an indoor swimming pool shall comply with Item 9 of Section AG105.2.

AG105.4 Prohibited locations. Barriers shall be located to prohibit permanent structures, equipment or similar objects from being used to climb them.

AG105.5 Barrier exceptions. Spas or hot tubs with a safety cover which comply with ASTM F 1346 shall be exempt from the provisions of this appendix.

AG106.1 General. Suction outlets shall be designed and installed in accordance with ANSI/APSP-7.

Property address:_____ _____

Note: All electrical work including all conduit, bonding and wiring shall be installed in accordance with the City of Springfield Adopted Electrical Code and shall only be installed by a City of Springfield recognized Electrical Contractor. Failure to obtain any of the required rough-in electrical inspections before the work is covered shall result in the removal of any and all materials in order to conduct the required inspections. A FINAL inspection is required to close the Swimming Pool BLD permit and Project.

By signing this Agreement you are confirming that you have read the above requirements and will comply with them before adding any water to your pool. Once this Agreement is signed, you will receive a copy for your records. This Agreement will become part of the requirements to receive a Swimming Pool Building Permit.

I certify that I have read and acknowledge the content of this document.

Property Owner: _____ _____

Signature Printed Name

Date signed: _____

OFFICE USE:

PRJ #_____ BLD #_____ Date Issued: _____

ELE #_____ Date Issued: _____

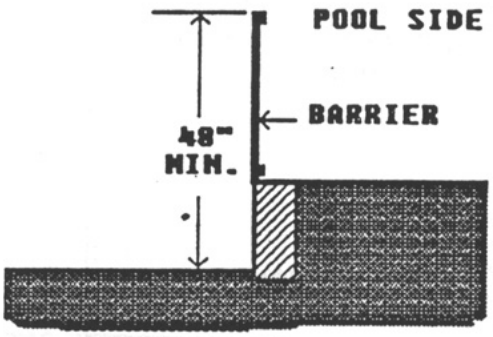

WHEN THERE IS A DIFFERENTIAL IN GRADE THE BARRIER HEIGHT IS MEASURED ON THE SIDE AWAY FROM THE POOL.

A.

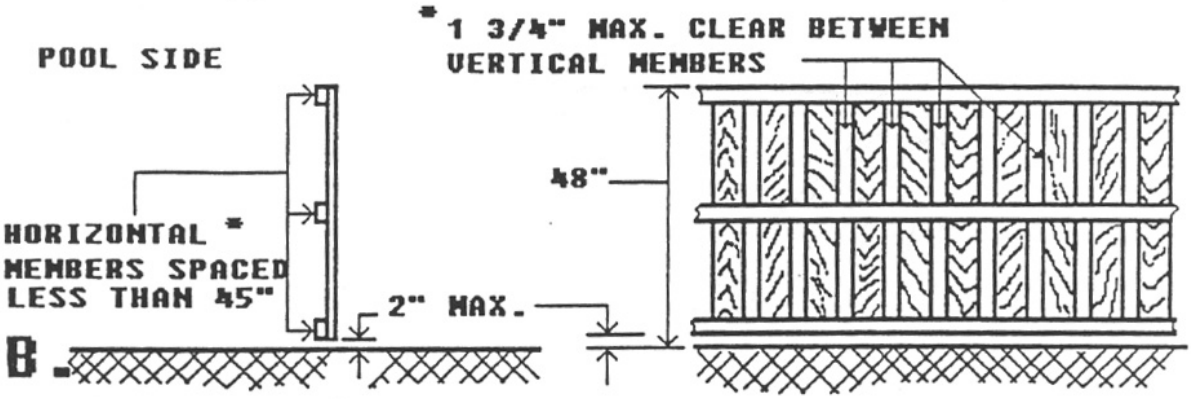

B.

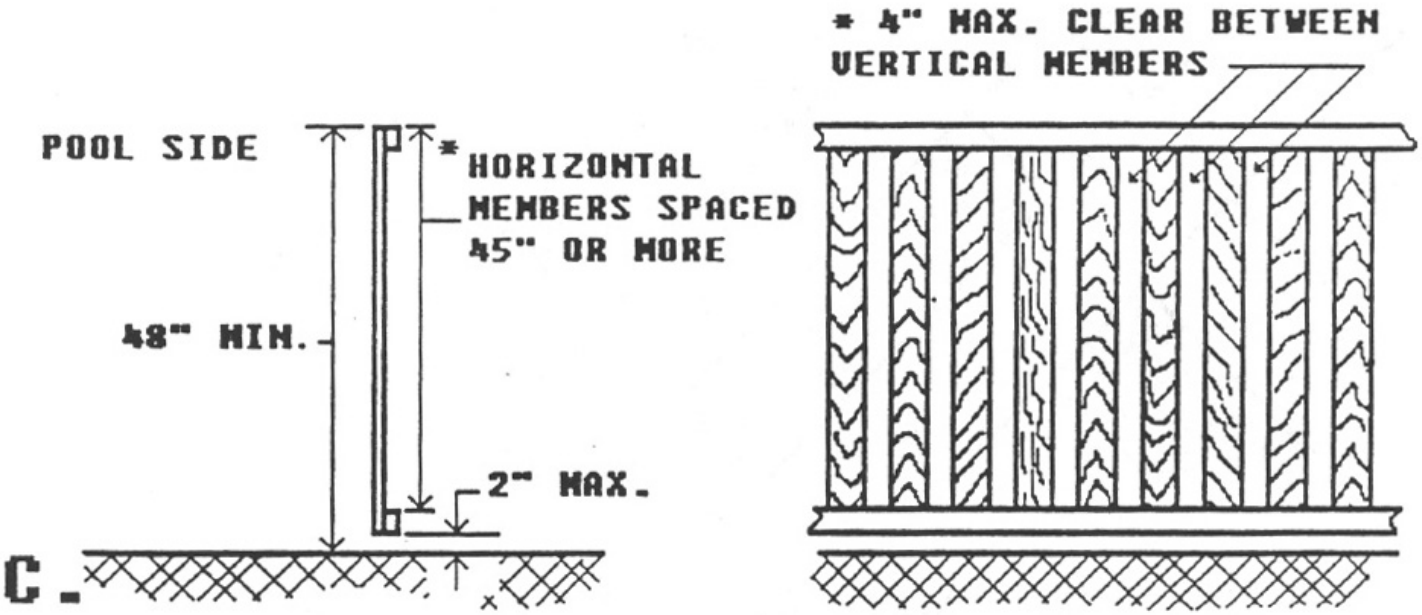

C.

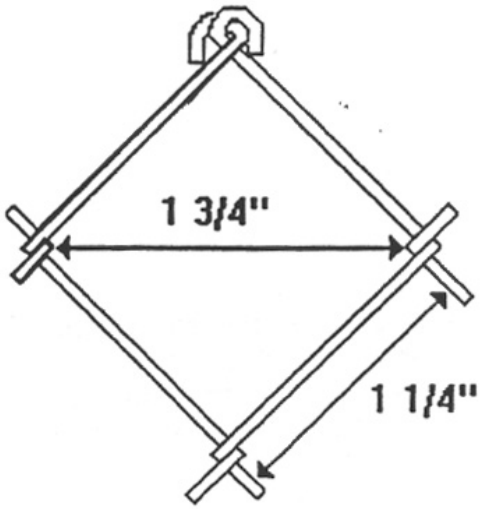

CHAIN LINK FENCE MESH FOR PRIVATE POOLS

D -

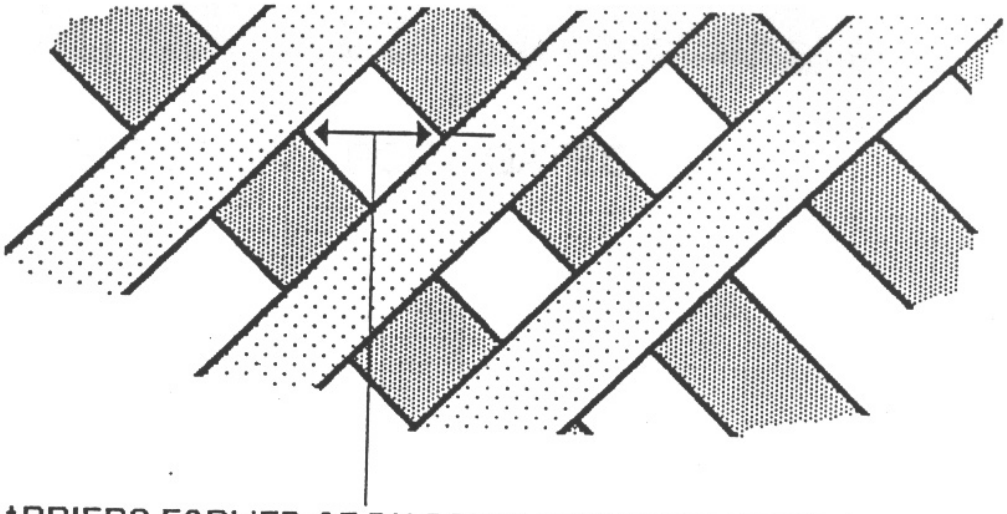

BARRIERS FORMED OF DIAGONAL MEMBERS SHALL NOT HAVE OPENINGS LARGER THAN 1 3/4" (44MM)

E -

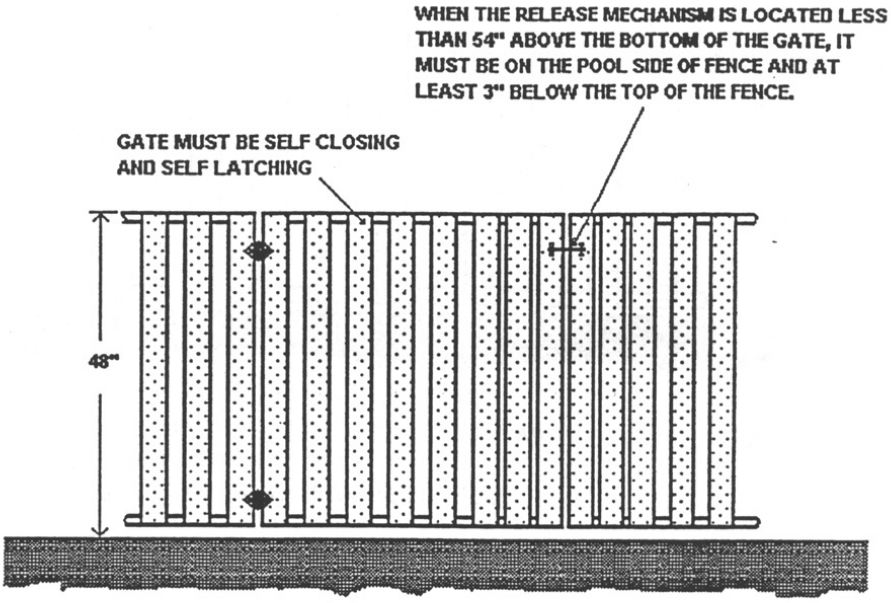

PEDESTRIAN POOL GATES

F -

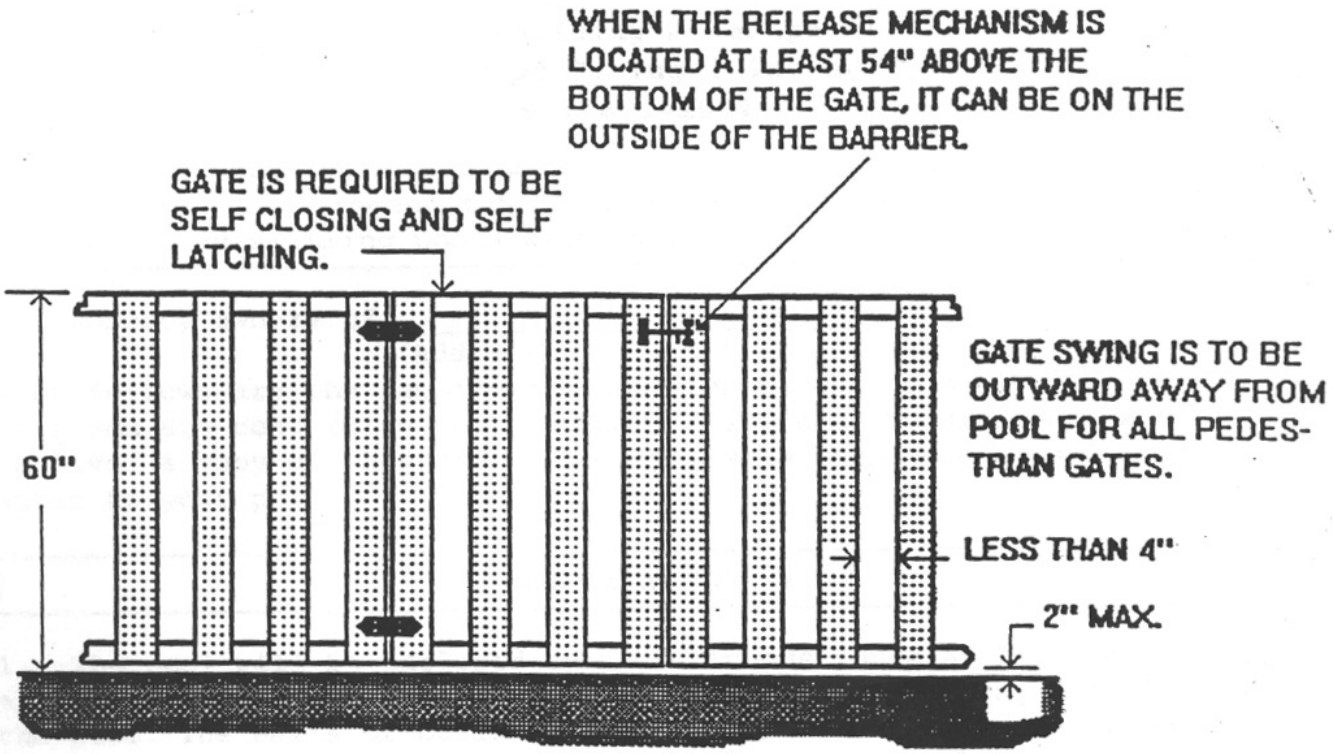

GATES FOR OTHER THAN PEDESTRIAN USE ARE REQUIRED TO BE SELF LATCHING BUT NOT SELF CLOSING. ALL GATES ARE TO BE EQUIPPED SO THAT THEY CAN BE LOCKED.

G -

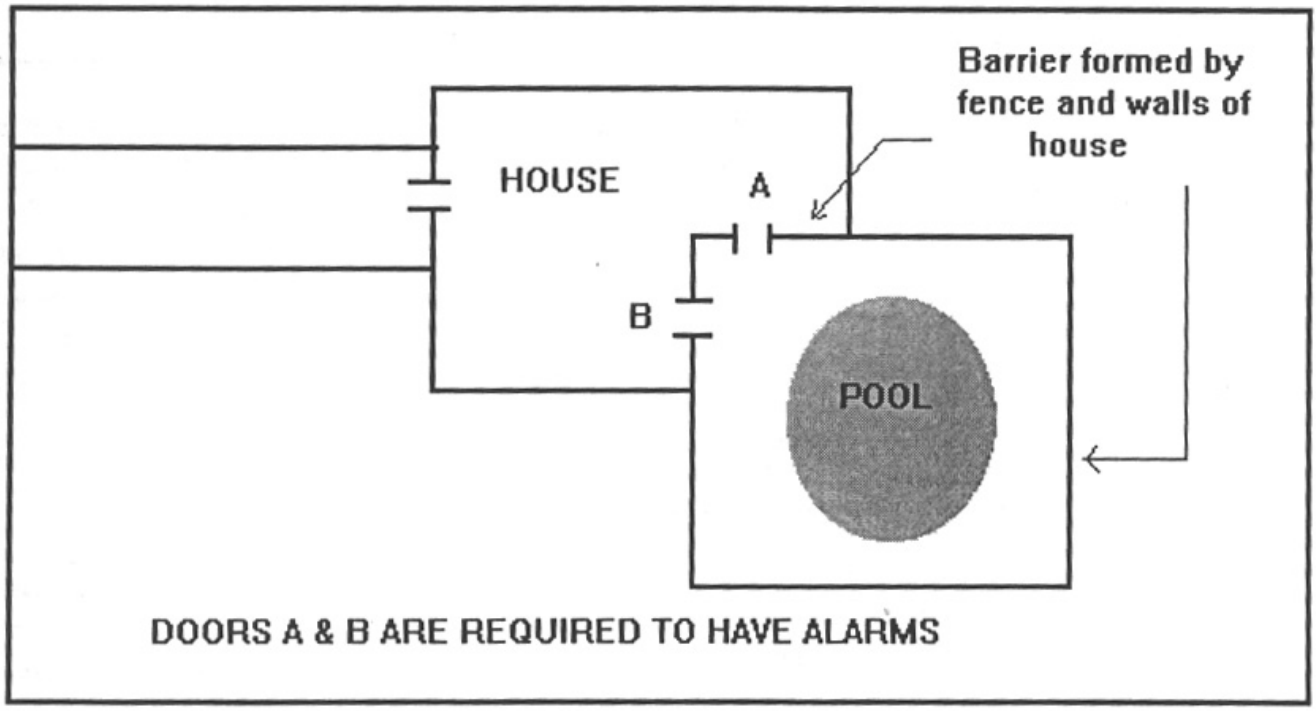
Barrier formed by fence and walls of house
HOUSE
A
B
POOL
DOORS A & B ARE REQUIRED TO HAVE ALARMS

H -